| item | NAME |
|---|---|
| 1 | SUCTION FILTER TANK |
| 2 | Relief Valve |
| 3 | Roots Blower |
| 4 | Moter |
| 5 | Suction Silencer |
| 6 | 90 ELBOW |
| 7 | Pressure Gauge |
| 8 | Guard |
| 9 | Pedestal |

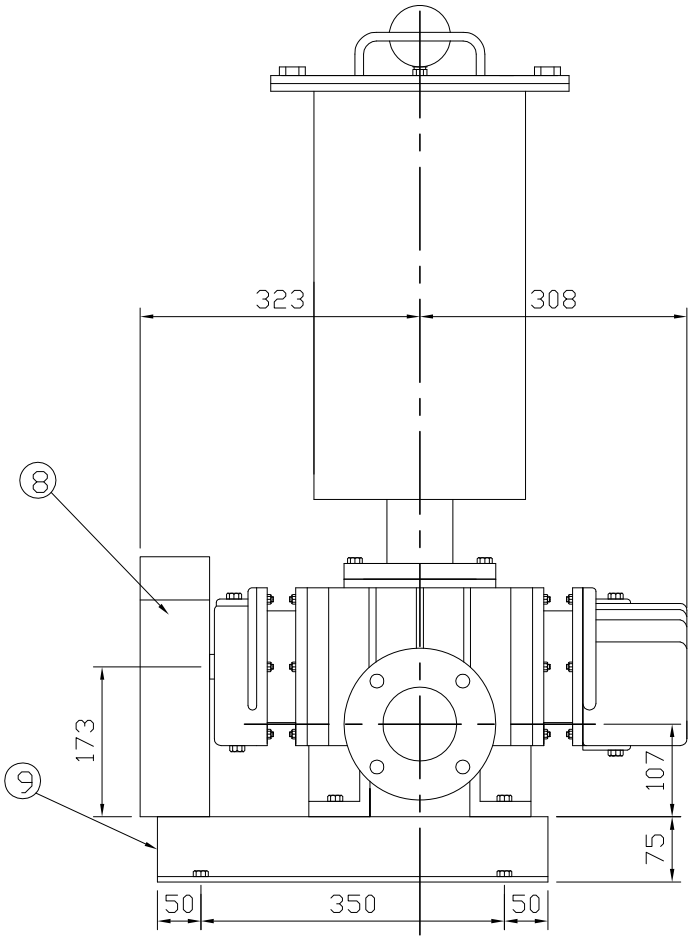


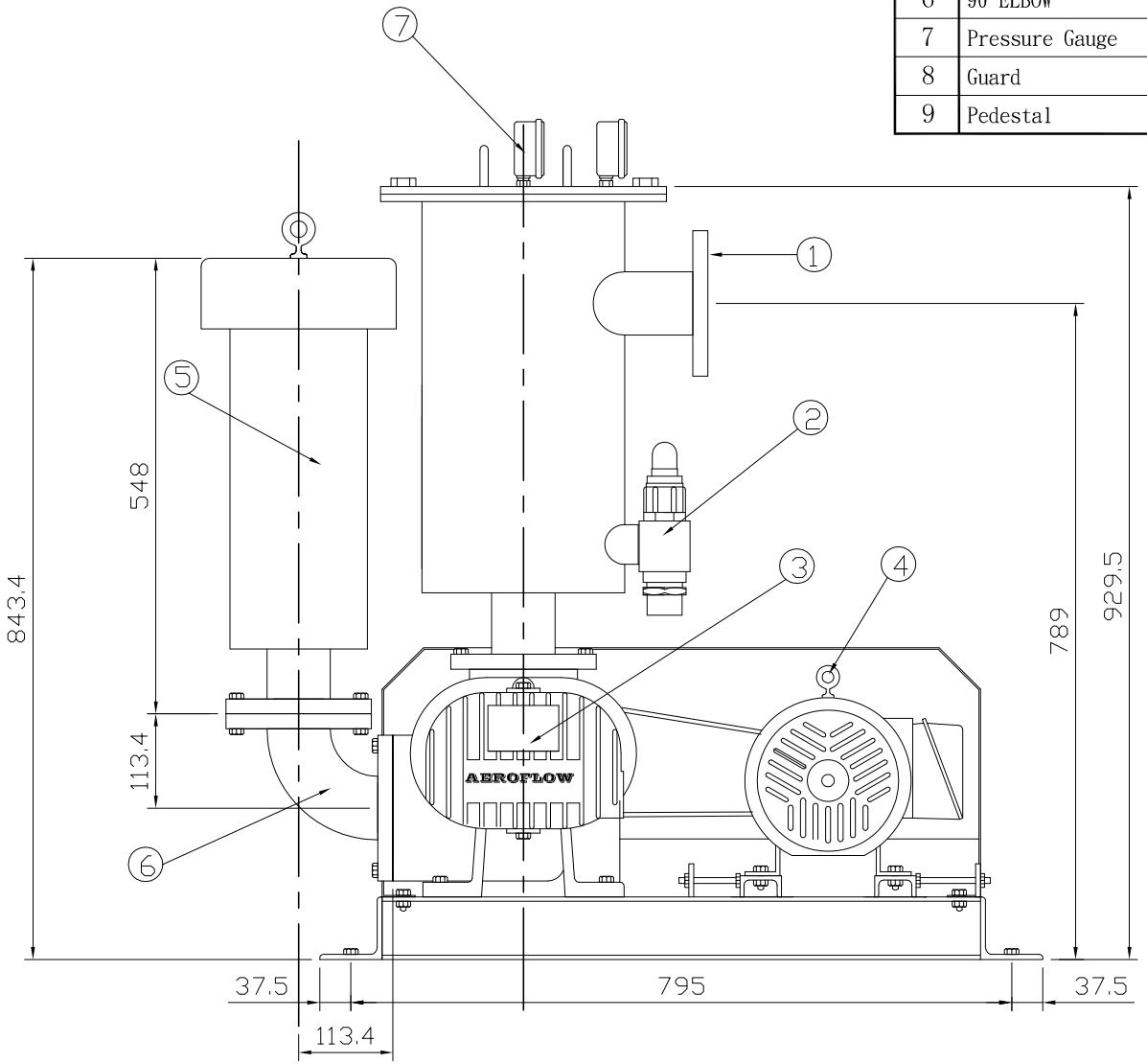


| | | | | | | | | | |
|---|---|---|---|---|---|---|---|---|---|
| HEY-WEL MACHINERY CO., LTD. | Drawing Name | Type NO. | Drawing NO. | Material | Unit | Scale | Drew | Date |
| | Outline Drawing | RSV-65 | C306-H0 | Assembly | mm | A4 1/16 | koko | 08. 12. 04 |
| | Revision | Description | Revision | Description | Revise | Check | Approved | Projection |