item	NAME
1	Suction Silencer
2	Moter
3	Roots Blower
4	Relief Valve
5	Pressure Gauge
6	cut-off valve
7	Guard
8	Pedestal
9	Discharge Silencer
10	Flexible Joint

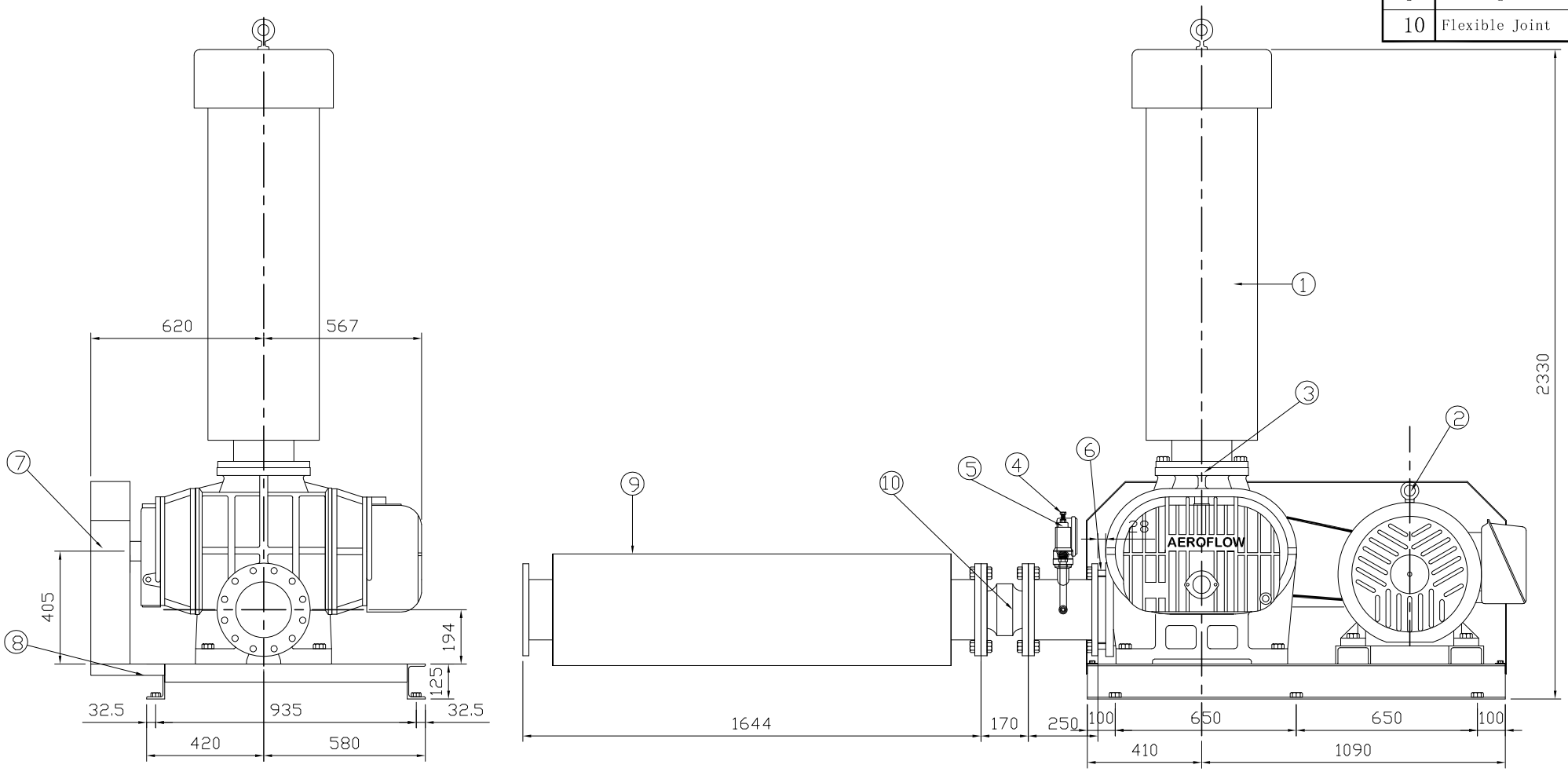

HEY-WEL MACHINERY CO., LTD.	Drawing Name	Type NO.	Drawing NO.	Material	Unit	Scale	Drew	Date
	Outline Drawing	RSS-200	C216-H0	Assembly	mm	A4 1/16	koko	08. 12. 04
	Revision	Description	Revision	Description	Revise	Check	Approved	Projection